Composites USA, Inc. - FRP Fitting Standards

Fitting Style No. 101

Product Class: DG

Order as: #101 - "L" - "C"
#101FxP - "L" - "C" for flange by plain end
#101FxF - "L" -"C" for flange by flange end

Resin Type: Dual Guard
Project Identification: Standard
Corrosion Allowance: 0.000
Note: L shown is nominal, custom lengths avail.

ROUND DUCT-OFFSET

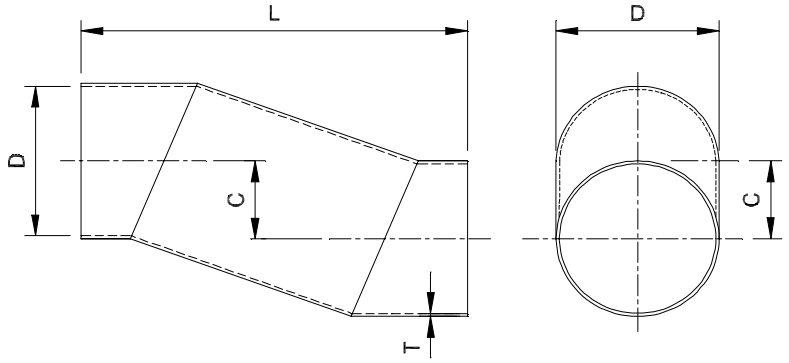

Diameter "D"		Length "L"		Offset "C"	
inches	mm	inches	mm	inches	mm
Specify	Specify	Specify	Specify	Specify	Specify

Diameter "D"		Length "L"		Offset "C"	
inches	mm	inches	mm	inches	mm

Composites USA
One Peninsula Drive, North East, MD USA 21901
1-410-287-2700 Fax: 1-410-287-5222 info@compositesusa.com