Composites USA, Inc. - FRP Fitting Standards

Fitting Style No. 150

Product Class: DG

Order as: #150 -"D":"W"x"H"-"L"
#150 FxP -"D":"W"x"H"-"L" flange by plain end
#150 FxF -"D":"W"x"H"-"L" flange by flange end

Resin Type: Dual Guard
Project Identification: Standard
Corrosion Allowance: 0.000
Note: default "T" = thickness of round duct at "D"="W"

SQUARE TO ROUND TRANSITION

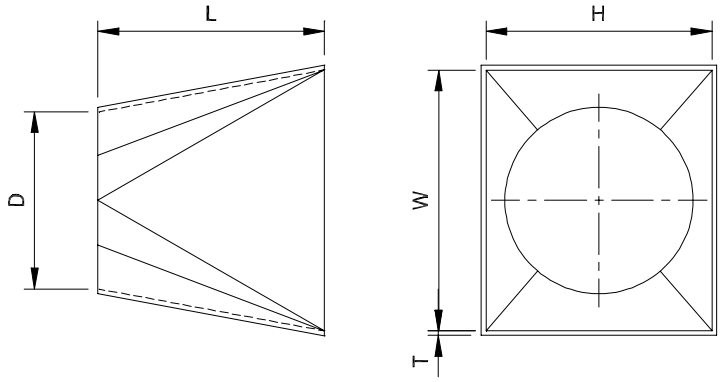

Diameter "D"	Width "W"	Height "H"	Length "L"	Thickness "T"
inches	inches	inches	inches	inches
Specify	Specify	Specify	Specify	See Note

Diameter "D"	Width "W"	Height "H"	Length "L"	Thickness "T"
mm	mm	mm	mm	mm
Specify	Specify	Specify	Specify	See Note

Composites USA
One Peninsula Drive, North East, MD USA 21901
1-410-287-2700 Fax: 1-410-287-5222 info@compositesusa.com