Composites USA, Inc. - Fitting Standards

Fitting Style No.: **SS-137**
Order as Fitting: **SS-137** **-"D"**

Material: **Pure Guard SS**
Options:
- ☐ Stainless bolt set
- ☐ Stainless Flange Rings
- ☐ Quick Clamps (Avail. </= 18")

FM APPROVED

Project Specifications: Standard Design & Materials, -6" w.c.
Ships standard with A-36 steel rings, SS rings >48" diameter, one plated bolt set and gasket

30° 2-GORE MITERED L.R. ELBOW

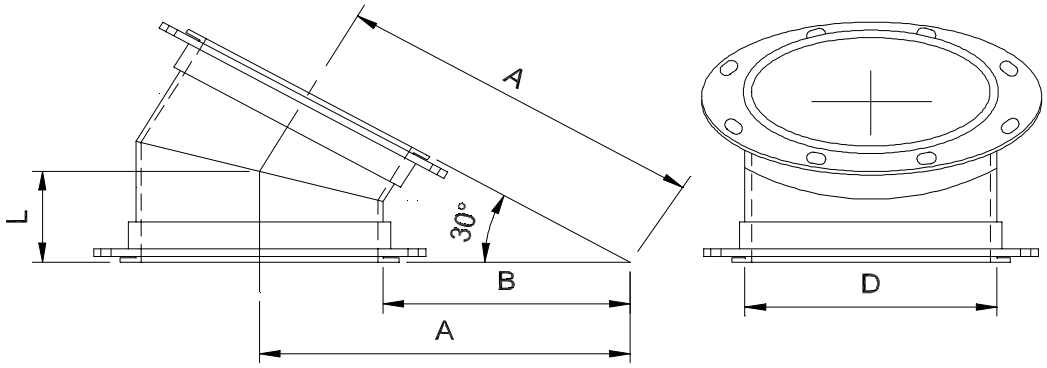

Diameter "D"		Face-Center "L"		Throat Radius "B"		Diameter "D"		Face-Center "L"		Throat Radius "B"	
inches	mm	inches	mm	inches	mm	inches	mm	inches	mm	inches	mm
4	102	1.61	41	4	102	48	1219	19.30	490	48	1219
6	152	2.41	61	6	152	50	1270	20.10	511	50	1270
8	203	3.22	82	8	203	52	1321	20.90	531	52	1321
10	254	4.02	102	10	254	54	1372	21.71	551	54	1372
12	305	4.82	123	12	305	56	1422	22.51	572	56	1422
14	356	5.63	143	14	356	58	1473	23.32	592	58	1473
16	406	6.43	163	16	406	60	1524	24.12	613	60	1524
18	457	7.24	184	18	457	62	1575	24.92	633	62	1575
20	508	8.04	204	20	508	64	1626	25.73	653	64	1626
22	559	8.84	225	22	559	66	1676	26.53	674	66	1676
24	610	9.65	245	24	610	68	1727	27.34	694	68	1727
26	660	10.45	265	26	660	72	1829	28.94	735	72	1829
28	711	11.26	286	28	711	78	1981	31.36	796	78	1981
30	762	12.06	306	30	762	84	2134	33.77	858	84	2134
32	813	12.86	327	32	813	90	2286	36.18	919	90	2286
34	864	13.67	347	34	864	96	2438	38.59	980	96	2438
36	914	14.47	368	36	914	102	2591	41.00	1042	102	2591
38	965	15.28	388	38	965	108	2743	43.42	1103	108	2743
40	1016	16.08	408	40	1016	114	2896	45.83	1164	114	2896
42	1067	16.88	429	42	1067	120	3048	48.24	1225	120	3048
44	1118	17.69	449	44	1118	126	3200	50.65	1287	126	3200
46	1168	18.49	470	46	1168	132	3353	53.06	1348	132	3353

Composites USA
One Peninsula Drive, North East, MD USA 21901
1-410-287-2700 Fax: 1-410-287-5222 info@compositesusa.com